UNIT L

1 BEDROOM/ 2 BATHS

FLOOR PLAN
1,347 sq ft.

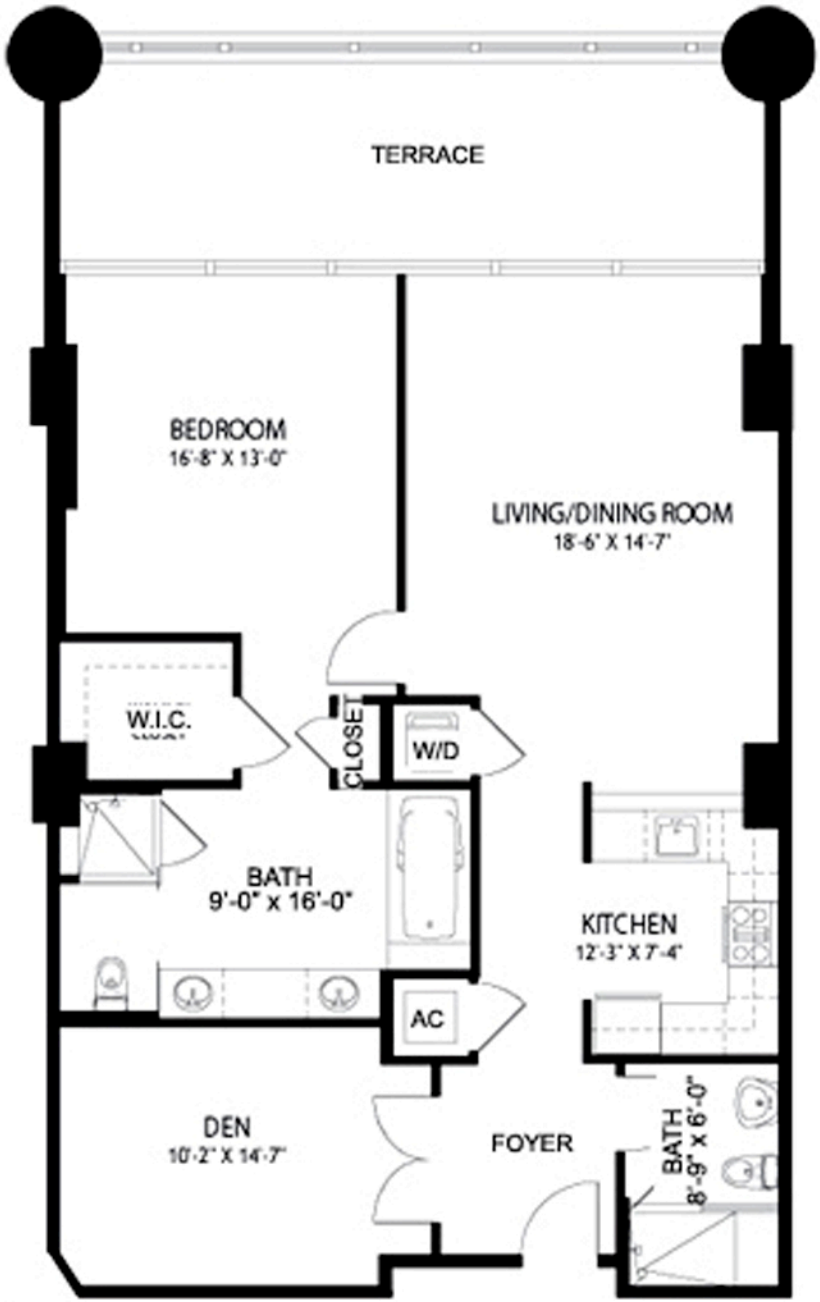

CondosandCondos.com

Contact:
STEVE SAMUELS
Email: ssamuels@condosandcondos.com
Ph: 305.494.1767
Fax: 888.430.3343
Web: www.condosandcondos.com

THE CLUB

LUXURY CONDOMINIUMS
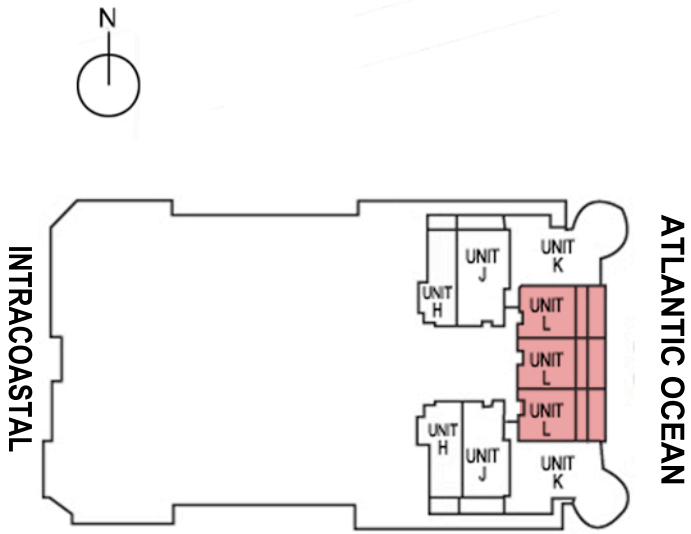
AT THE HILTON FORT LAUDERDALE BEACH RESORT